DRAWING NUMBER:	350W612		
LTR	CHANGE	BY	DATE
A	SEE EC03427	Leon C Jordan	03-06-07

BILL OF MATERIALS — DRAWING NUMBER: 350W612

ITEM	QTY	DESCRIPTION	PART NUMBER
1	1	CROSSHEAD	211X11
2	1	PIN. 100 MM	207V103
3	2	BUSHING	534V136
4	2	SEAL	387V43
5	2	1-8NC X 9" HEX HEAD CAPSCREW	1616-37AA
6	2	1-8NC LOCK NUT	1118-10AA
7	1	GREASE FITTING	1120-2

WEIGHT: 415 LBS. APPROX.

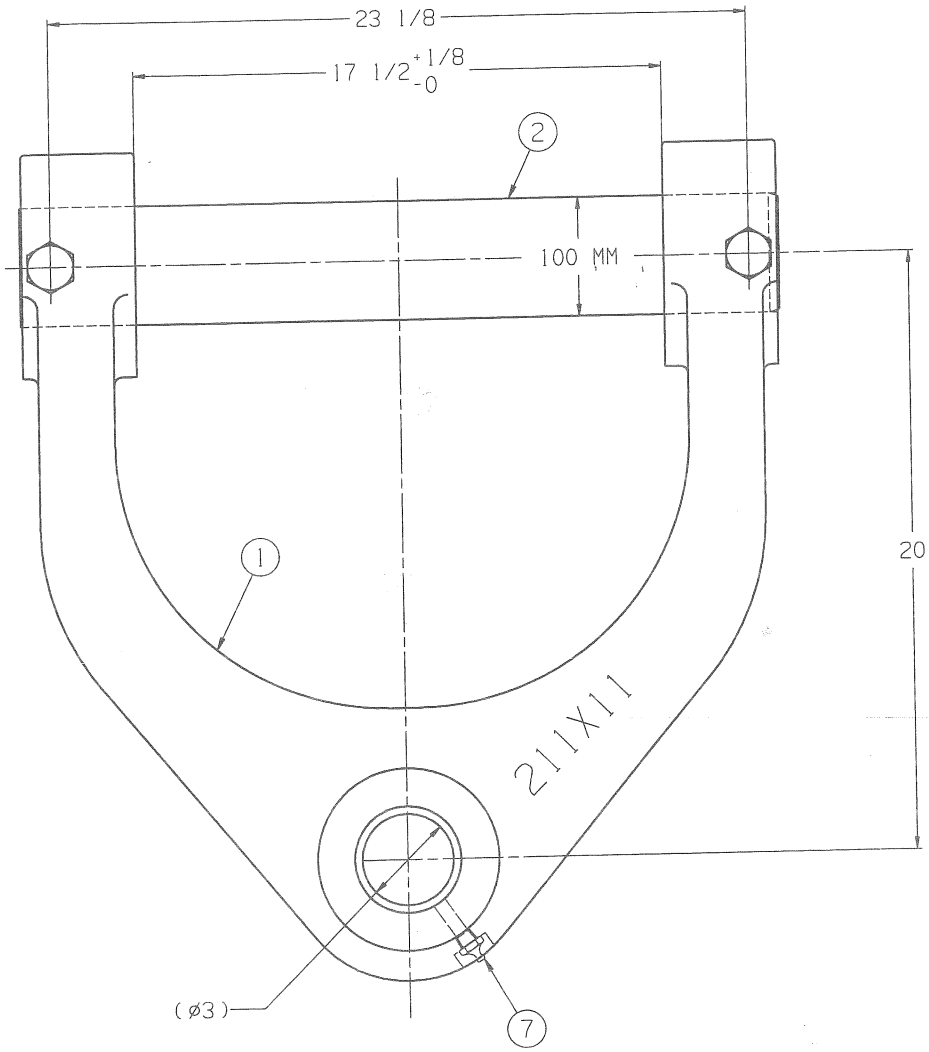

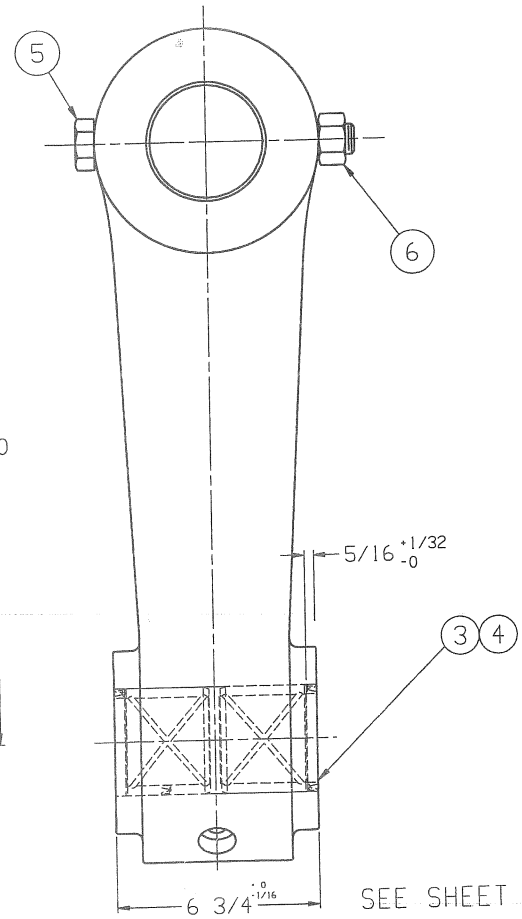

NOTE:
INSTALL SEALS WITH LIP OUT

SEE SHEET 2 FOR MACHINING DETAILS

STATUS	INITIALS	DATE
CHECKED		
PRE-PRODUCTION		
PRODUCTION		

TOLERANCE: EXCEPT WHERE SPECIFIED
DECIMAL : .XX ± 0.010, .XXX ± 0.005
FRACTIONAL : ± 1/16
ANGULAR : ± 1 DEG

USE FOR	REQ'D	MATERIAL
~~CAT 345C MH~~	1	
CAT 350 MH		
ZPC Plant		

CROSSHEAD ASSEMBLY

DRAWN BY	DATE	SCALE	350W612 SHT 1 OF 2	A
NOE	07-19-05	1/4		

NASCO-OP™
Power of Numbers
800-321-3396